Pulsonix PCB

PULSONIX

Advanced Schematic/PCB Design Environment

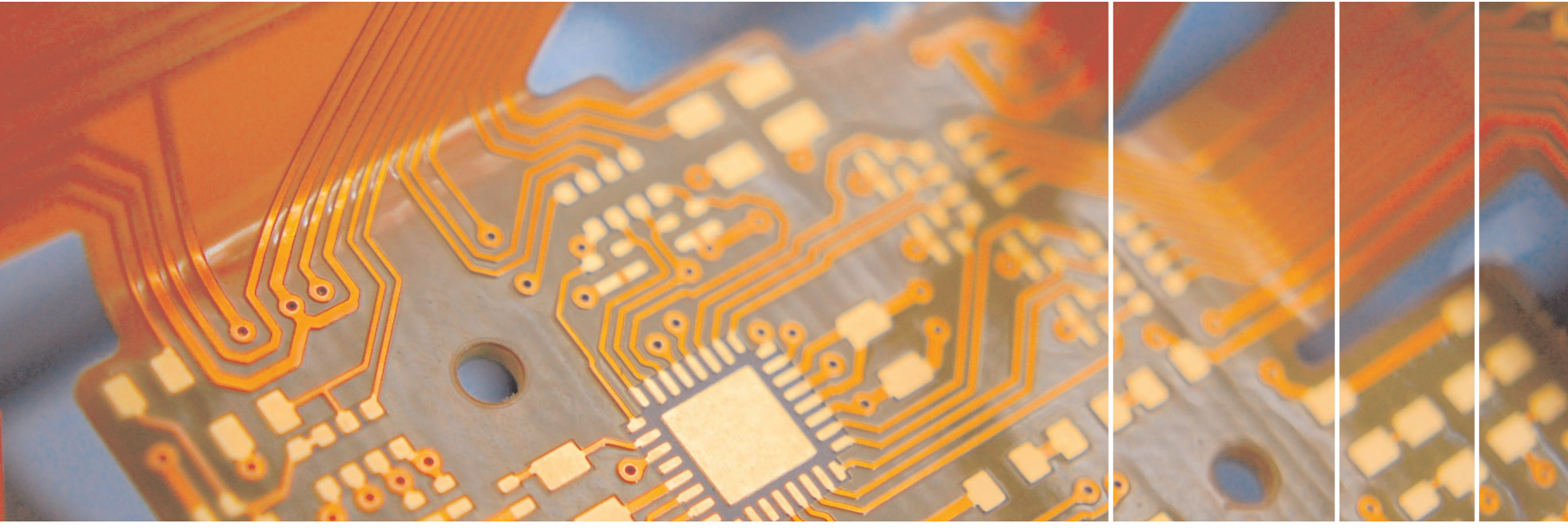

Pulsonix - setting the technology standard

The complete design suite

Pulsonix is an advanced electronics design suite of tools developed to meet the changing needs for modern Schematic capture and PCB layout.

Developed in 2001, it's the first completely new, high-level combined Schematics Capture & PCB layout product for many years. This exciting software tool has been developed from the ground up by PCB design industry professionals using the very latest techniques in graphics and data handling.

Easy to learn and logical to use

Pulsonix was been conceived with an easy to understand user interface using Microsoft standards, look and feel.

The menu system is logical and intuitive avoiding unnecessary mouse clicks or movement as you create your designs. The whole design process is well structured and thought-through, with minimum use of menus and in-context commands right there when needed. The toolbars and keyboard keys are fully configurable so that at all times you have shortcut keys and tools to hand, making the design process much more efficient.

Training needs kept to a minimum

A key principle in the design of Pulsonix was to create a product where the need for structured user training could be minimised. With this implementation and you will find that you are productive in a very short time. Pulsonix is delivered with an informative Users Guide and up to date, context sensitive on-line HTML help.

Pulsonix has been designed based on key criteria

- Easy to use – by way of an intuitive user interface
- Designed for the casual user and the professional
- Import design and library data from other EDA products

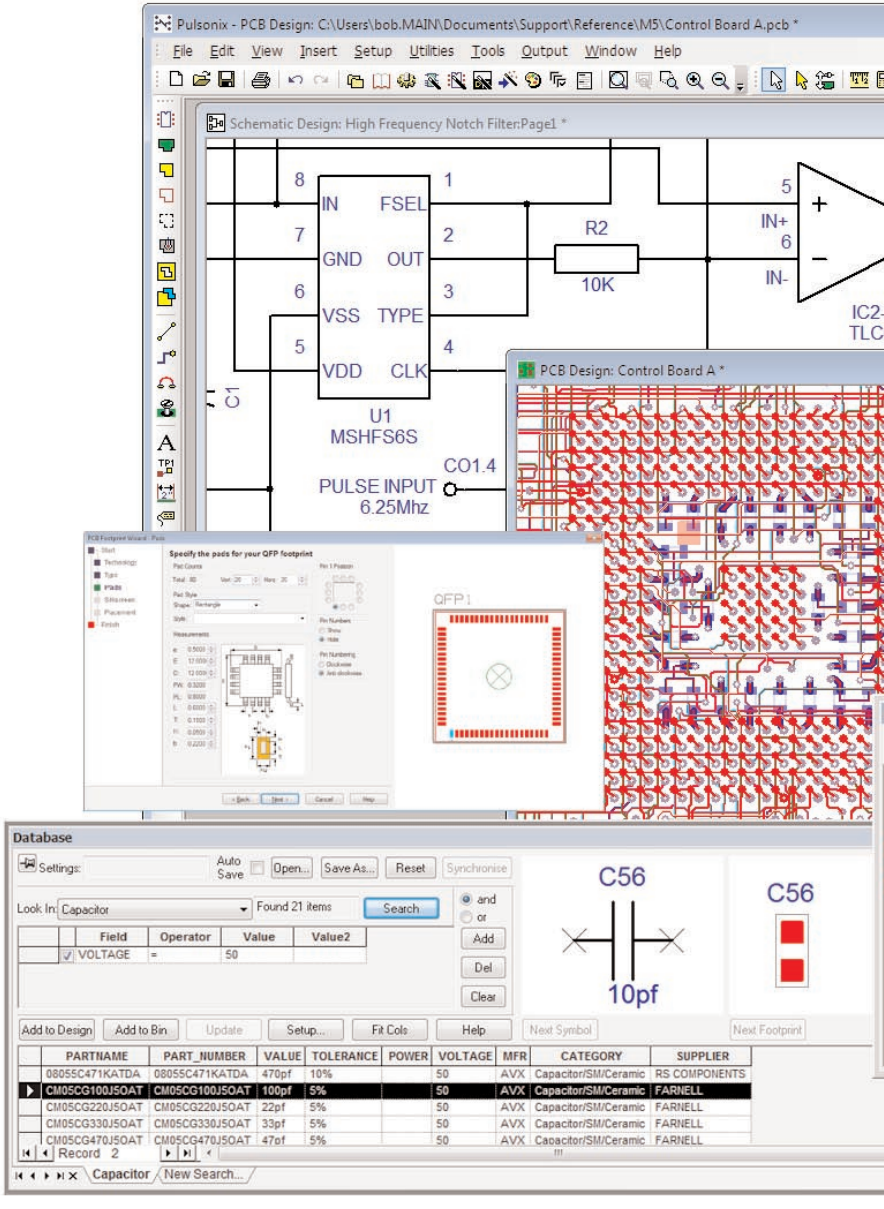

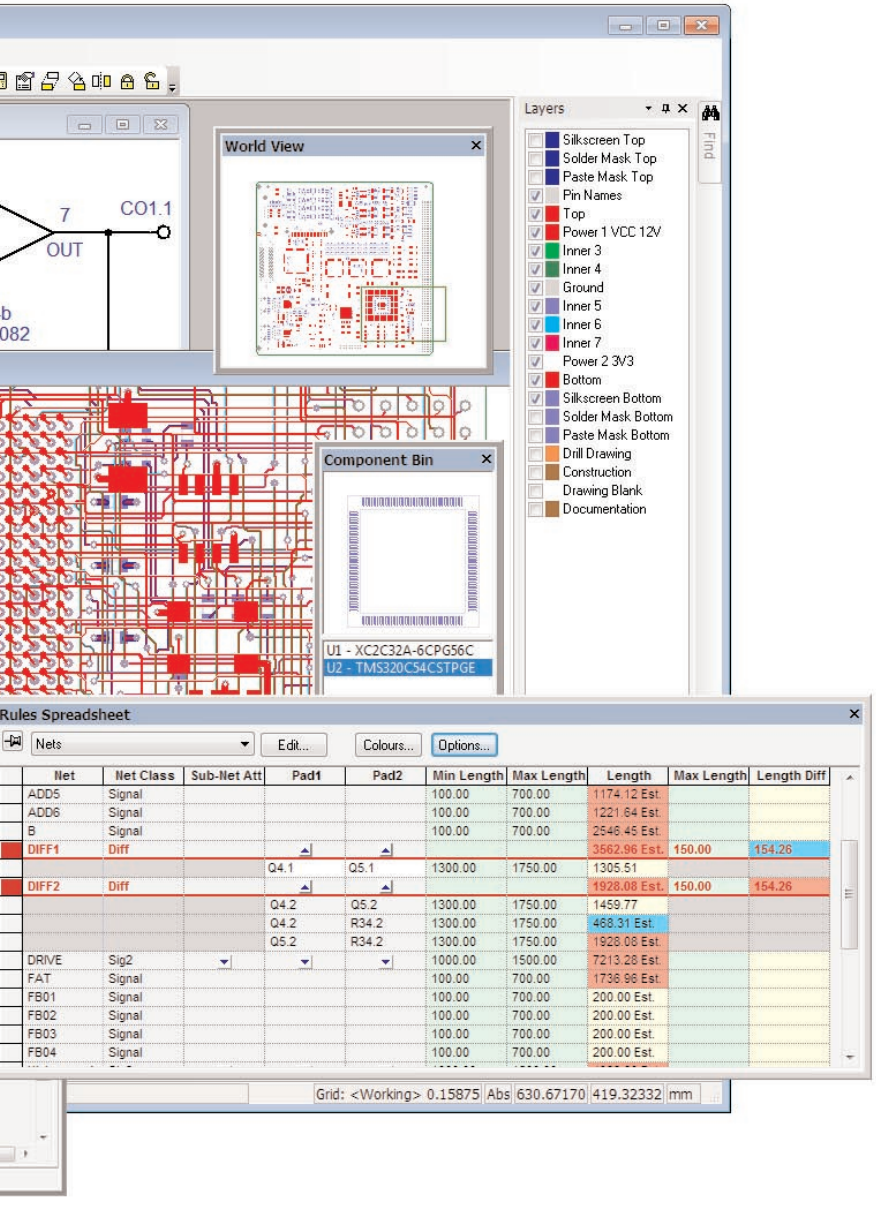

PULSONIX

Peace of mind in superior quality

The Pulsonix team throughout the company is highly customer focused; every activity is centred on you, the customer. Our support and service is 5-star and totally unparalleled with any other EDA vendor, this is in addition to a leading quality product.

The Pulsonix brand is synonymous with quality and service. Once you purchase the product you'll be buying into the reassurance that you will be well looked after throughout every stage of the process.

Designed with the future in mind

Pulsonix is built on the latest concepts in software design, hence it has many years of life and potential expansion ahead.

With the need for constant growth of a product through customer feedback and market demands, Pulsonix is well positioned to grow with any technology or trends that are being developed, and even some that are years ahead!

Pay for what you need, Pulsonix grows with you

Dynamic product range

With the Pulsonix product, you only pay for what you need. The product range is scalable and modular. Start off with the product you need now and upgrade as your needs grow with your growing designs and technology challenges.

Flexible licensing

Whether you require node-locked or floating network licenses broadcast by your company server, Pulsonix has a licensing scheme for you.

Our floating network licensing is one of the most adaptive around; with a powerful administration interface for the server, licenses can be allowed or restricted around the network or work groups.

Tightly integrated package

Integrated SCM and PCB design editors - uses the same libraries for all design and Spice simulation

Import Filters

Pulsonix boasts the industry's largest range of import filters. Tried and tested, these are high-quality reliable import filters that have been proven time and time again. Import filters are available for:

Import Filters are available for:

- Altium
- Protel
- Accel
- P-CAD
- CadStar
- Visula PCB
- PADS
- DxDesigner
- ViewLogic
- Eagle
- Integra
- OrCAD
- Cadence Allegro
- Zuken CR5000
- System Designer
- Ultiboard
- EdWin
- Plus more

5-Star Service

Pulsonix is widely known for its high quality features and efficient after-sales care. Our service has been given a 5-star rating by our customers, proving that your service and support are a high priority to us.

Low cost of ownership

As well as being an affordable solution, Pulsonix has one of the lowest annual maintenance pricing structures in the market today. The price is reflective of what we believe it should be; not the over-inflated costs of some of the legacy products about. This all means that the cost of your Pulsonix ownership and return on your investment makes sense.

> Pulsonix is our new ECAD standard tool for Schematics, simulation and PCB design. It has been chosen for its modern easy-to-use interface and its perfect price/performance ratio.
>
> *O. Hollinger, Carl Zeiss AG.*

Scalable solutions

All Pulsonix products have the same core structure and are ready to use out of the box. Each is supplied with Schematic Capture, PCB Layout and our Autorouter. An 80,000 part library and tools to manage and create them are also supplied. Once your needs grow, Pulsonix can be further enhanced with our speciality range of add-on options; options such as interactive high speed design or the database connection modules for example. Our options are standalone so they don't rely on another other option being available.

Educational incentives

We believe that the educational establishments deserve to teach and manage projects using one of the easiest systems available today, Pulsonix is ideal within a classroom environment and all project and research work within it. There are very generous discounts and schemes available if you fall within our educational boundaries.

Scalable design solutions

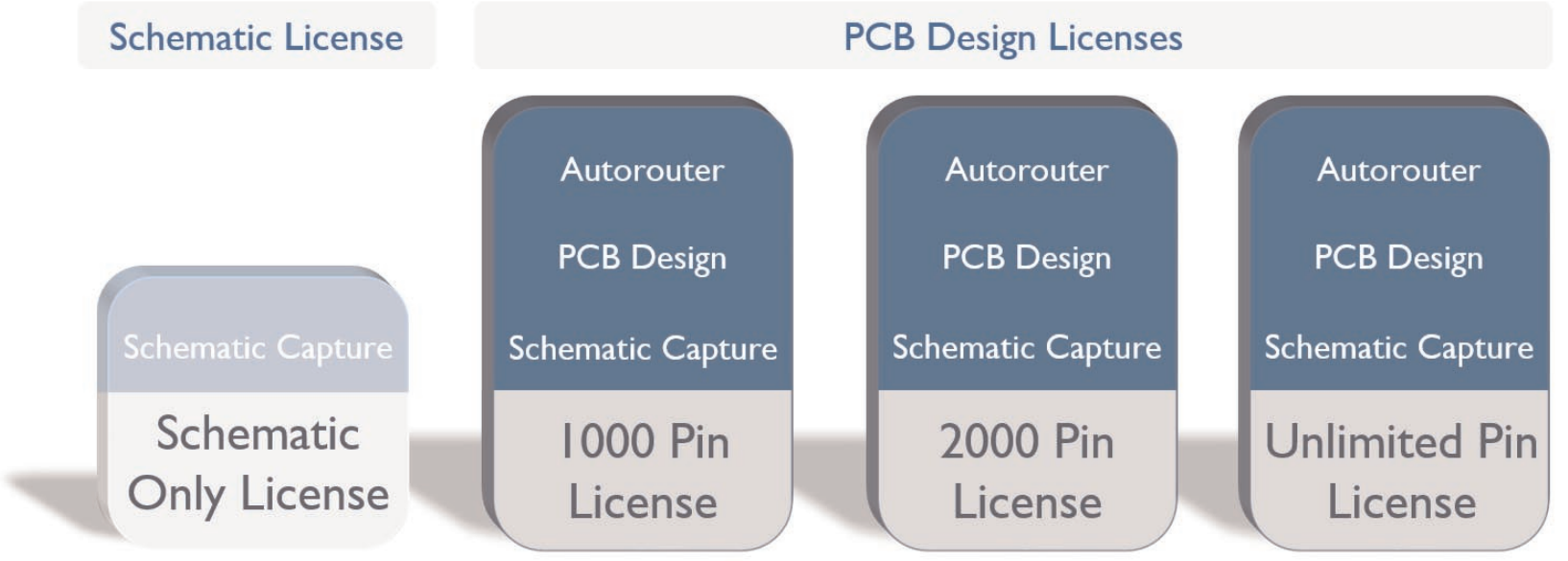

Build your Pulsonix product from four base levels: Schematic Only, 1000 Component Pins, 2000 Component Pins and Unlimited Component Pin licenses.

Fast, intelligent schematic creation

Create clear and concise schematics

Create clear and concise schematic drawings in this easy-to-use design environment. No tedious menus or commands to navigate with modeless operation and intuitive fast usage.

Electrical Rules Checking

Electrical rules checking (ERC) both Online as you design and as an interactive batch mode are readily available to ensure your connective design rules are adhered to at all times during the circuit creation. All ERC violations are instantly notified to you so you can take corrective action.

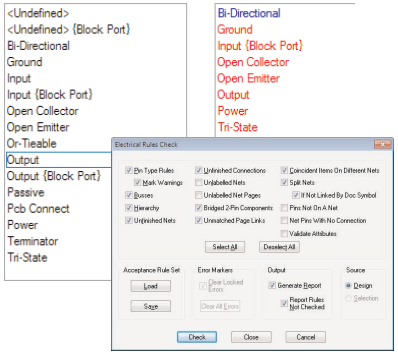

User configurable ERC Rules - essential for right first time design

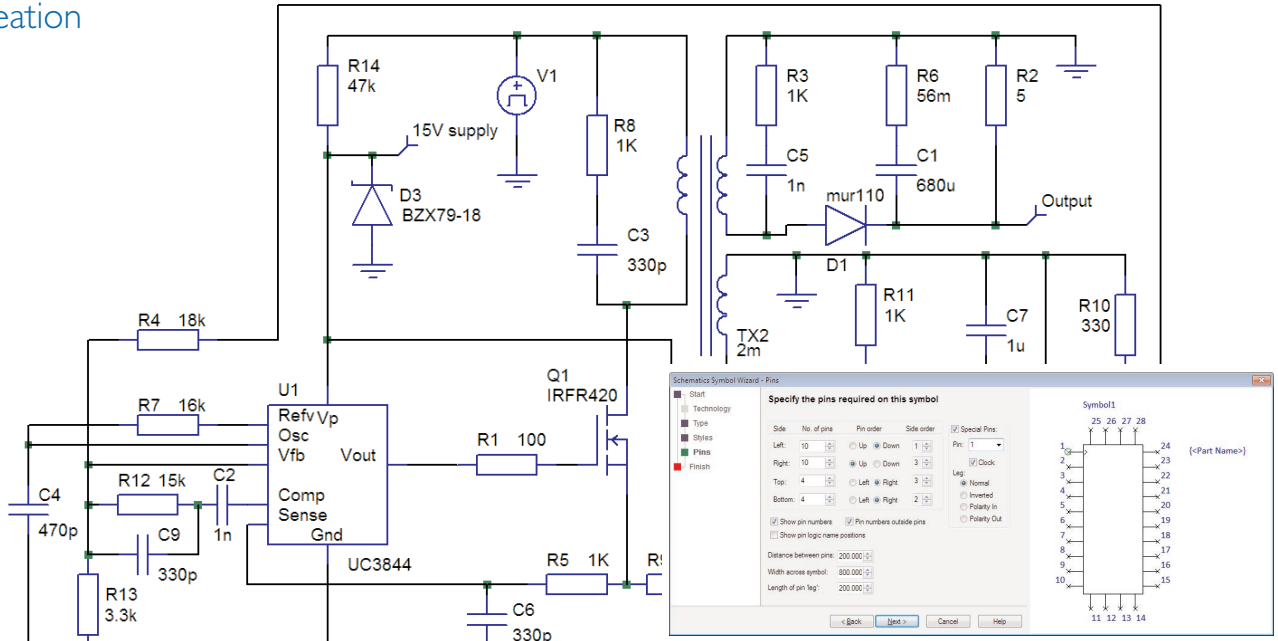

The graphical Symbol Wizard enables you to quickly create new Symbols

Flat Sheet and Multi-level Hierarchical Design

Pulsonix provides 'top down' design: breaking blocks into functional elements allowing you to define the detail of each element, and bottom-up' design: facilitating the re-use of commonly used circuit elements using pre-defined blocks to build a solution.

Instant Cross Probing

Cross probe bi-directionally between your Schematic and PCB designs. Click on the component or connection in the Schematic and see the corresponding component instantly highlighted in the PCB, or click on a footprint or track in PCB and see it highlighted in the Schematic.

Sketch Connections

Interactive Schematic Routing enables you to guide the routing path for electrical connections within your schematic design. With point-to-point routing and 'sketch' path mode, schematic connection routing has never been so easy and fast.

PULSONIX

Forwards and Backwards Design Annotation

Send design changes and ECO's to the PCB or make changes in the PCB and back-annotate them to the Schematic however your design process dictates.

Intelligent Busses

Intelligent buses can be added to your design in one movement. 'Open' and 'Closed' busses are flexible and powerful. Bus nets can be drawn with connective nets to lower-level hierarchy or left named for full implied (invisible) connectivity.

Intelligent PDF Export

Export your designs to an intelligent PDF ile. Drawings and design can be interrogated using the PDF file without the need to send the actual design file or load Pulsonix. Every design item can be queried and critical properties displayed.

Multiple Netlist Export

Export netlists from Pulsonix to other industry standard vendor formats such as ViewLogic, EDIF, OrCAD etc. Use the Pulsonix Schematic design editor as your choice for quick and reliable circuit capture.

Schematic Symbol Wizard

Takes you through creation of the symbol in a step-by-step sequence to easily produce regular symbols. The pin sizes, positions and numbering is selected to make symbol creation so simple and error free.

Spice Mixed-mode A/D Simulator

The integrated Pulsonix Spice Simulator option enables designs to be tried and tested at the very earliest stages of design.

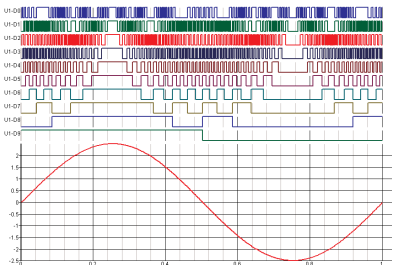

Design Variants

Define any number of Part and Assembly variants in your Schematic design and automatically transfer these through to the PCB.

Attribute Editor

The attribute editor enables editing of properties and critical information in the design using the powerful spreadsheet style editor. Quickly Copy/Paste attributes and parameters into the cells for components, nets and pins.

Database Connection

Add components from your corporate Parts database directly to your design using the Database Connection option.

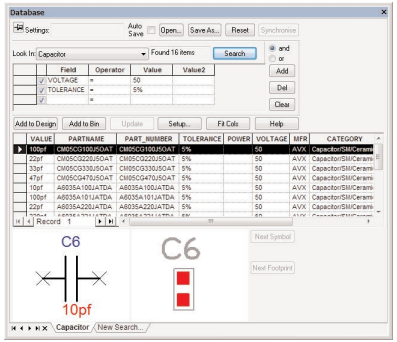

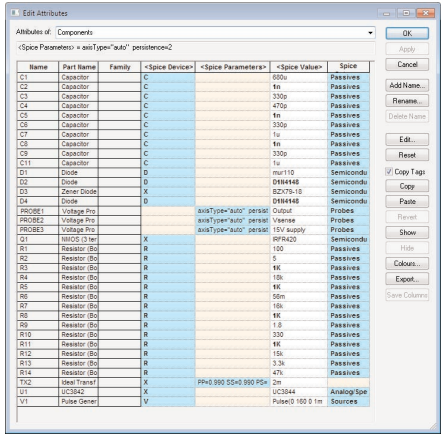

View and edit all design attributes in the spreadsheet style editor

Feature Summary

- Integrated Schematics and PCB
- 80,000 Part library as standard
- True instanced Schematic hierarchy
- Drag & drop design methodology
- Fast menu-less operation
- Sketch connection mode
- Single-shot printing & plotting
- Export netlist to other PCB systems
- Intelligent Busses
- Instant cross probing
- Forwards & backwards annotation
- Style sheet templates
- Customisable drawing & title blocks
- Define constraint rules at SCM stage
- Schematic symbol wizard
- Intelligent Component & Net naming
- Star Point & Testpoint definition

Integrated Spice A/D mixed mode simulator

Integrated solution

The integrated Pulsonix Spice Simulator option enables designs to be tried and tested at the very earliest stages of design; proofing the design concept up-front thus reducing the need for physical prototypes.

Driven from the Schematic

Driven from within the Pulsonix Schematic environment, our Spice simulator uses the schematic design that will eventually create your PCB. The simulation menu provides advanced options from which to drive the analysis.

Integrated SCM/PCB library environment

With one library environment, and the same one as your Schematic and PCB designs, all your Parts can be managed using the library manager tools provided. All Spice model details and pin mappings are handled for both homogenous and heterogeneous Parts, thus human errors are minimalised.

Comprehensive models

With over 30,000 Spice model library definitions and 6,500 actual models supplied, our default base set is ready to use.

The Parts library interface allows direct model access. During this important Spice phase, essential parameter data can also be assigned to Parts and symbols (in the case of heterogeneous parts).

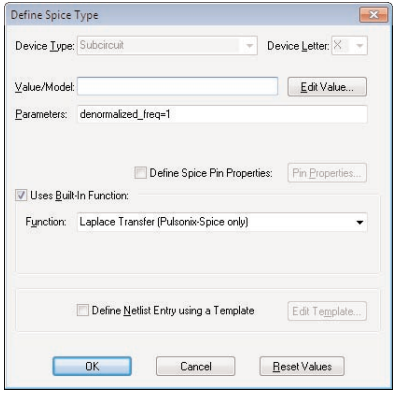

Integrated library management allows models to be defined and essential parameters added

High rate of convergence

Pulsonix Spice is based on a substantially enhanced version of SPICE 3 and XSPICE. The underlying algorithms have been reworked to provide new analysis modes to improve convergence and speed. In the case of convergence, in trials, Pulsonix Spice out performed 3 well known Spice based products including the market leader.

Random Probing

Pulsonix Spice includes post simulation random-probing. Following simulation, graphs of circuit voltages, currents and device powers can be created simply by clicking on a point on the schematic. This avoids the need to re-simulate the circuit each time an additional measurement is required. Alternatively, probes can be permanently fixed to a schematic so that a graph is created and incrementally updated during the simulation.

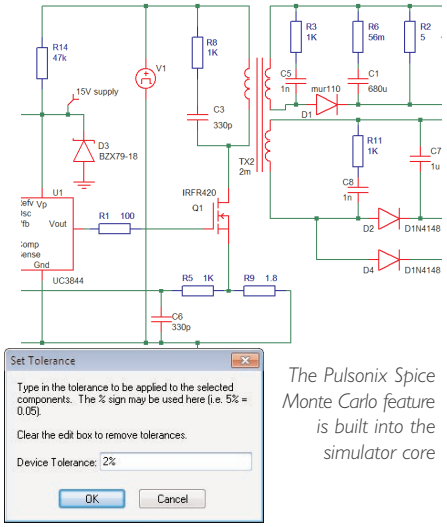

The Pulsonix Spice Monte Carlo feature is built into the simulator core

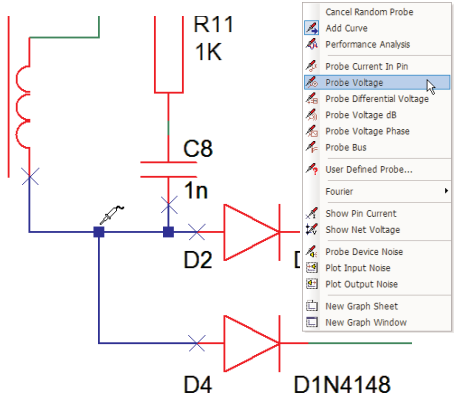

Following simulation, graphs of circuit voltages, currents and device powers can be created simply by clicking on a point on the schematic.

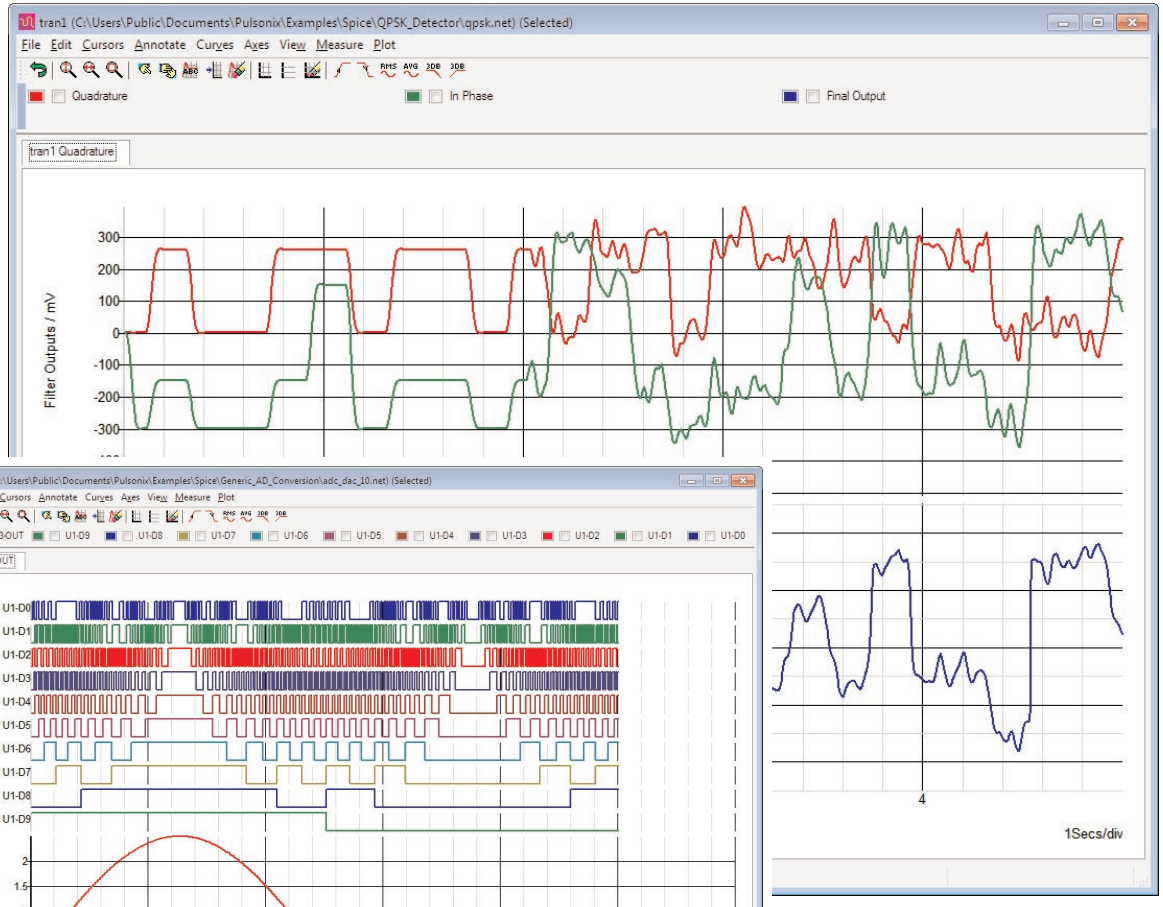

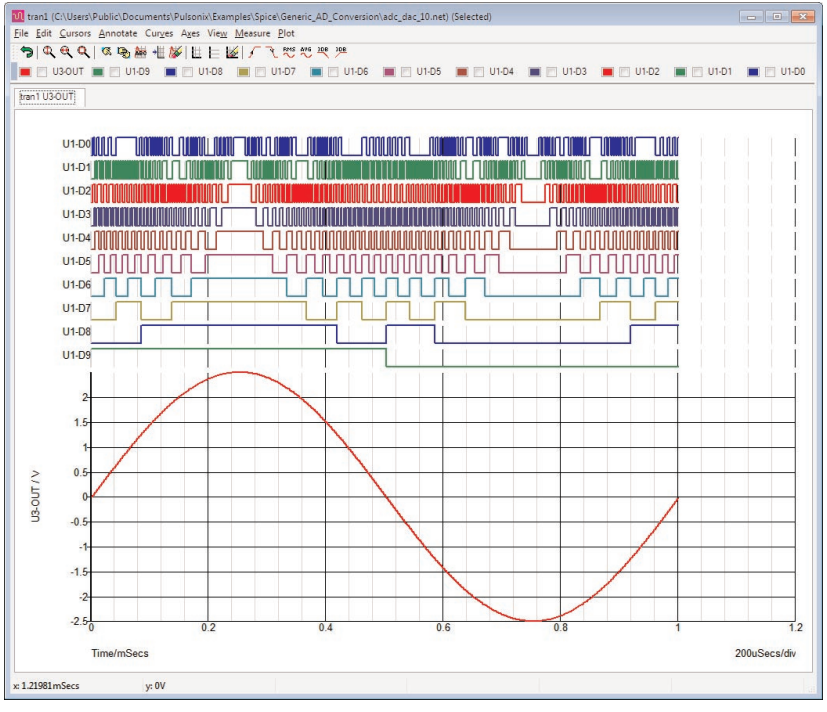

PULSONIX

Feature Summary

- Integrated into the Pulsonix Schematic Capture design environment
- Dialog driven user interface
- Convergence performance in benchmark trials exceeds results from industry leaders
- True mixed-mode simulation: closely coupled direct matrix (SPICE 3) analogue
- Event driven digital simulator
- Post simulation random probing
- Monte-Carlo and Multi-Step analysis
- Noise analysis
- Transient restart
- Transient Safe Operating Area testing
- Non-linear magnetics with air gaps
- Automatic pseudo transient analysis algorithm for operating point solution
- Variable step GMIN and source stepping
- Dynamic Bias annotation markers
- 30,000 Spice model library definitions and 6,500 actual models supplied
- Drag & drop model addition to the library
- Pulsonix Spice is compatible with 99% of available SPICE models
- Import standard SPICE models from outside suppliers - many of which can be downloaded from the Internet
- HSpice model file compatibility
- Analyses: operating point, DC sweep, transient,AC small signal, transfer function, sensitivity, pole-zero
- Comprehensive waveform analysis
- User definable scripting language
- Comprehensive user reference guide

Powerful PCB that's easy to setup and use

Design Variants

Using the Variant Manager, easily create any number of variants may be defined at either the Schematic or the PCB design stage. If using the Schematic as the master, the variant information will be automatically transferred to the PCB design. Detailed part variants can be easily created. Pulsonix allows Fitted/Not Fitted, different Part, Footprint, Attributes/Values, and even a different number of footprint pins per Component.

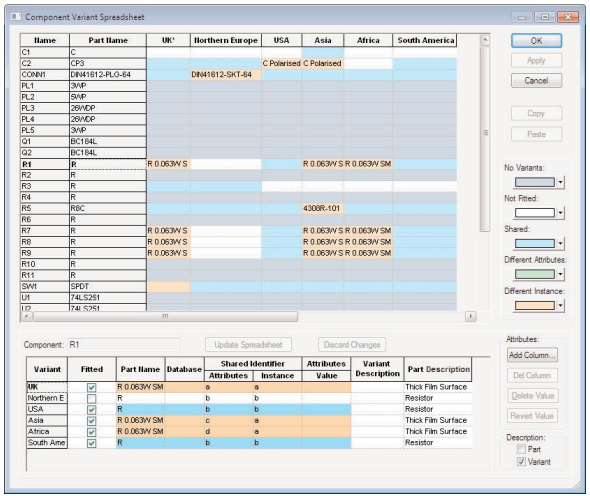

Complex assembly variants to match your global customer base

Custom Pads

Where standard pad shapes don't exist, Pulsonix allows you to create complex pad shapes; even unorthodox shapes such a touch switches where the drill is exposed. Custom pads can be created for any layer or stack.

Constraint Rules

Define and manage your constraint rules using the constraint manager. All rules previously defined in the Schematic editor are seamlessly passed through into the PCB design ready for use. Net Class and Class to Class parameters can be defined for nets where length and spacing rules need to be restricted.

DFM/DFT

Powerful design rules for manufacturing and test can be defined in addition to Pulsonix' comprehensive set of DRC rules. Following definition, checking is quickly made with all errors and warning displayed in the Errors Rules Panel. Each violation can be easily identified from the sorted list and dynamically reviewed in the design by simply clicking the rule error.

Thermal Rules

Using the Technology manager, add thermal rules for nets, net classes, areas and individual objects. Control over thermal relief on pads is provided for shape, spoke direction, number of spokes and connect/no connect status.

Construction Lines

Unique to Pulsonix, construction lines provide user-definable lines within your design from which to guide your design items. Use construction lines to create complex board outlines or align irregular shapes or design items.

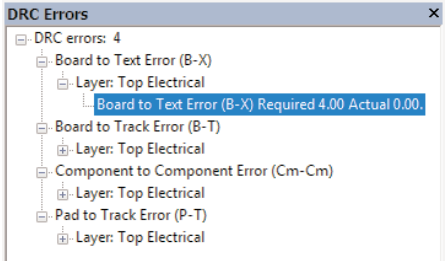

The browser displays the errors by layer and type for easy identification

Curved/Filleted tracks

All track shape styles can be changed on-the-fly using the context menu. Change between orthogonal, Angled, Any angle and Curved tracks. Angled tracks can be filleted, blending them between each other. Further blending can be achieved using the teardrop function.

Powerful Report Writer

The powerful Report Maker feature enables complex reports and netlists to be created using the easy-to-use dialog. ASCII-based Pick and Place reports, interfaces to assembly and manufacturing tools can be created with ease.

Standard Manufacturing Outputs

Extensive manufacturing outputs are exported - Gerber, Excellon, ODB++, Windows, HPGL, IPC-2581, IPC-356, PDF plus a fully customisable Report Maker interface to create company reports, BOMs, netlists and assembly placement outputs as you require.

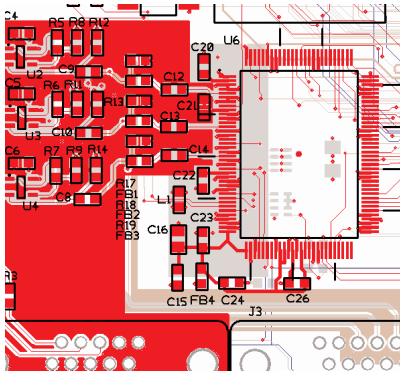

Intricate copper pouring is applied using Technology rules

ECAD-MCAD Co-Design

Bridge your MCAD-ECAD flows and design environments with support for IPC-2581, STEP, DXF and IDF. Where a mechanical interface is required, the bi-directional STEP interface can utilise STEP models and import critical board outlines and positional changes. The STEP exporter will write the board outline out ready to add mechanical data. The built-in STEP previewer allows you to examine and verify the design data before you send it to the MCAD system.

FPGA Integration

As standard, Pulsonix is supplied with a built-in FPGA interface to integrate with the Altera Quartus II or Xilinx ISE development systems.

> On Pulsonix, high density boards with 8 layers and 0.3mm micro-vias are being designed as well as power electronics. With an interface to our MCAD system, this has helped us a lot in shortening our development lead-times and is saving the company money.
>
> *P. Goerlich, Durr Dental GmbH*

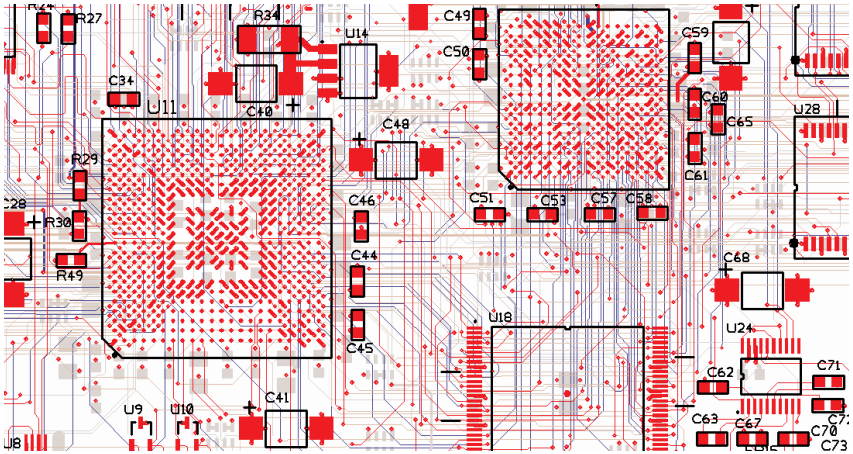

BGA and FPGA design is facilitated in Pulsonix using the powerful tools available as standard

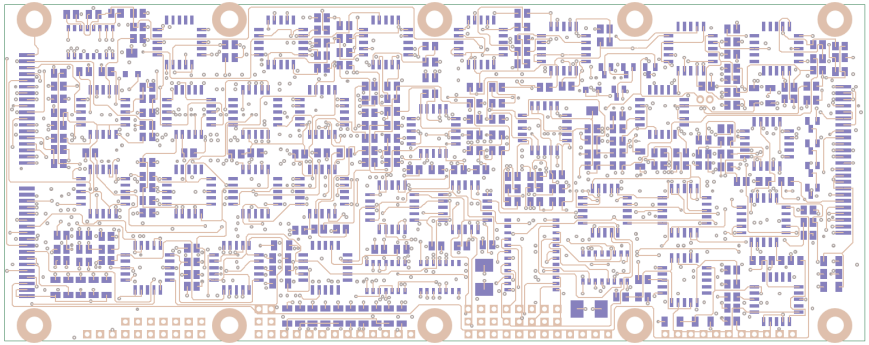

Advanced auto-place and auto-routing algorithms' accelerate your design flow

Interactive High Speed design

Constraint Driven Design Rules

Pulsonix delivers a powerful set of constraint rules-driven interactive High Speed design features. Conceived from the Schematic, the design is defined by the engineer during the early logical capture phase. All constraint rules are passed to the PCB design automatically where they are implemented using graphical guidance to ensure the layout is correct.

Interactive Length Indicators

During track routing, the interactive display shows an 'oval' around the area to be routed indicating whether the track is within the minimum or maximum rule limits you have defined. A colour coded and text-based head-up display shows whether you are working within the constraint rules. The exact rule defined is also shown in the head-up display for pin-to-pin and track length rules as well as the actual track path being routed and an estimate of the final track length.

Pin-to-Pin & Daisy Chain Routing

By editing Net Classes you can create specific track sequences using pin-to-pin rules; rules for min/max pin-to-pin length and the overall track length. Where the exact net path required is critical daisy-chain routing gives you precise control to determine the sequence. Once defined, these rules are used during routing and can be further checked using the DRC Manufacturing feature.

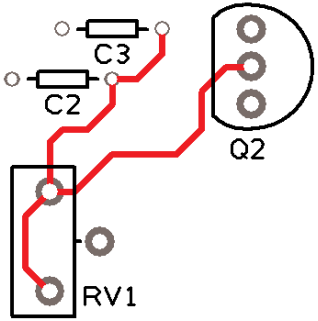

Pin to pin and Daisy Chain rules enable critical net paths to be defined

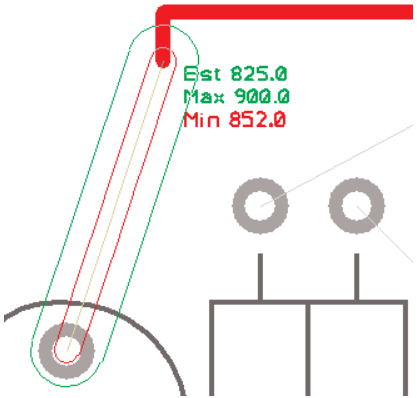

Coloured graphical and head-up displays show you progress of track routingColoured graphical and head-up displays show you progress of track routing

Differential Pair Routing

The advanced constraint rules allow Differential Pairs to be created easily and quickly. The two net pairs are routed interactively from their source using a dual path for both tracks and utilising an optional spacing rule between them to keep separation exact. The Differential Pairs may have rules that define how much they are allowed to differ in length once completed and what the minimum percentage of the overall length is allowed to deviate away from being 'paired'. When layer swaps are required, you can choose the via pattern to use. The interactive editor displays the legal via pattern available and the new track exit paths. Used in combination with the other Net Length rules, precise control of the length of the Differential Pairs can also be defined. Once routed, inherent Differential Pair knowledge is retained so that track 'pair' still acts as one unit, making modification less error prone. These rules also form part of the post-layout Design Rule Checking.

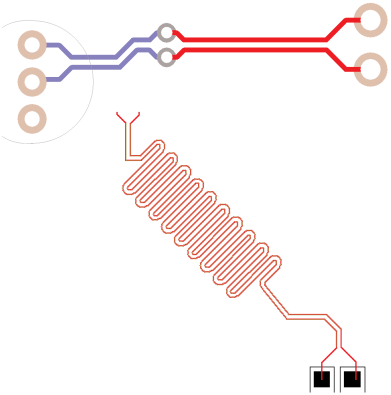

Differential Pairs are easily created for track pairs and serpentine route paths

Serpentine Routing

Serpentine Routing enables you to increase the length of high speed nets following your constraint rules without introducing spacing errors and without manual intervention. Using the Serpentine Routing command you can define additional constraint parameters, such as the amplitude and separation of each loop, the number of loop cycles to insert, and the amount of additional length required.

Interactive Spiral Tracks and Shapes

The High Speed option also contains RF design features. Advanced Spiral creation is supported for copper, tracks and shapes. These can be used on electrical and non-electrical layers as required. When created as tracks or copper, they can also be connected to as part of a net. Full DRC checking to these items is also permitted. Spirals can be associated with pads and vias within a footprint and reused on multiple designs. Complex spirals can also be used to create components such as planar transformers for use through multi-layer and Embedded Component technologies.

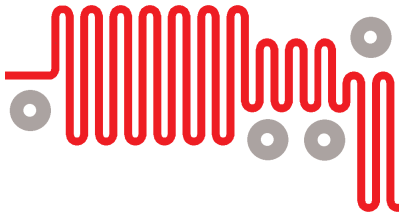

Complex serpentine routing can be easily defined and constructed

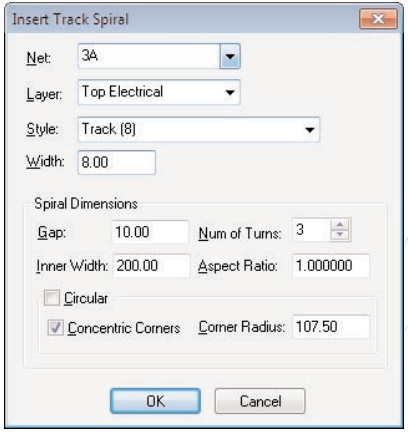

Spirals for your design and footprints are created using dialog driven rules

RF Design features

As part of the RF design suite, Pulsonix provides essential features to facilitate this; square-ended tracks and chamfered track corners. Both features are enabled on a Net Class basis to allow control of these features. Square-ended tracks provide precise track ends when an 'open-ended' square end is required without the use of a square landing pad to achieve this. Chamfered corners allow a traditional 45-degree inside and outside mitre to contain a 90-degree inner corner and 45-degree outer corner, ideal for RF designs.

Feature Summary

- Differential pair definition and routing
- Interactive routing of track pairs
- Pattern control for vias
- Track length rules
- Pin-to-Pin rules
- Maximum Length deviation rule
- Net length rules during routing
- Dynamic display of Min/Max rules
- Head-up of rules in text and updating
- Graphical net length indicators
- Min/Max Track length rules
- Min/Max Pin-to-Pin Track length rules
- Net Track length differences rule
- Conditional Track length Min/Max rules
- Daisy chain Pin-to-Pin topology rules
- 90 and 45 degree serpentine routing
- Spiral creation using intelligent rules
- Circular/square spiral shapes
- Square-ended tracks
- Chamfered track corners for true RF mitres

Corporate Database Access for Pulsonix

Industry Standard ODBC Connection

PDC connects to manufacturing, engineering and corporate databases using any ODBC connection. It allows access to many databases and other storage formats such as MS Access, MS Excel, CSV,TXT, DBase, Fox, Sage, MySQL and SQLServer for example.

Configuration

A graphical interface provided is used to configure the system with easy mapping between the 'host' data fields and Pulsonix attribute fields. Configuration allows critical fields to be defined and checked. Critical fields are those which when checked, must be the same as the database and not 'local' values. A tool to migrate Pulsonix Part data to the database format is also supplied.

Parametric Searching

Within Pulsonix, up-to-date Parts can be identified from the central database using powerful SQL parametric search criteria from drop-down list selections. Searching using a number of search parameters will quickly locate suitable Part candidates from the database which you can then further refine to identify the exact Part you require.

Supply of Database

Where you wish to use this exciting product but an existing company database does not exist, the purchase of a 'ready-made' template database is possible. The database is supplied in configured and populated format ready to use and make your own additions to.

Management Tools

PDC is run from a centralised database resource. The system administrator is able to manage database access and read/write permissions for each user using standard server admin rights. Additional library management control facilities are available when using the PDC with floating Pulsonix licenses.

Consultancy

We, at Pulsonix, understand the power of consultancy and are therefore able to offer a consultancy service for various aspects of the database integration, including data migration, setup, Part creation and system administration services.

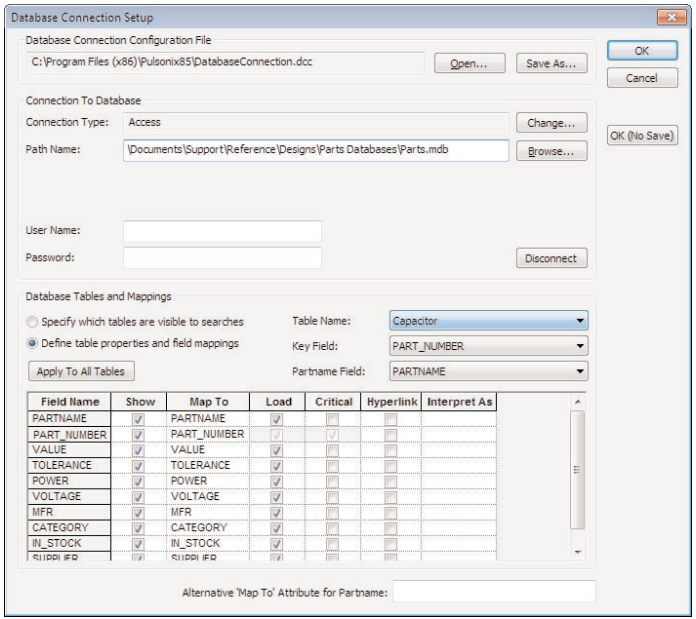

Connect to your manufacturing/engineering/corporate database and choose key tables and critical fields to use

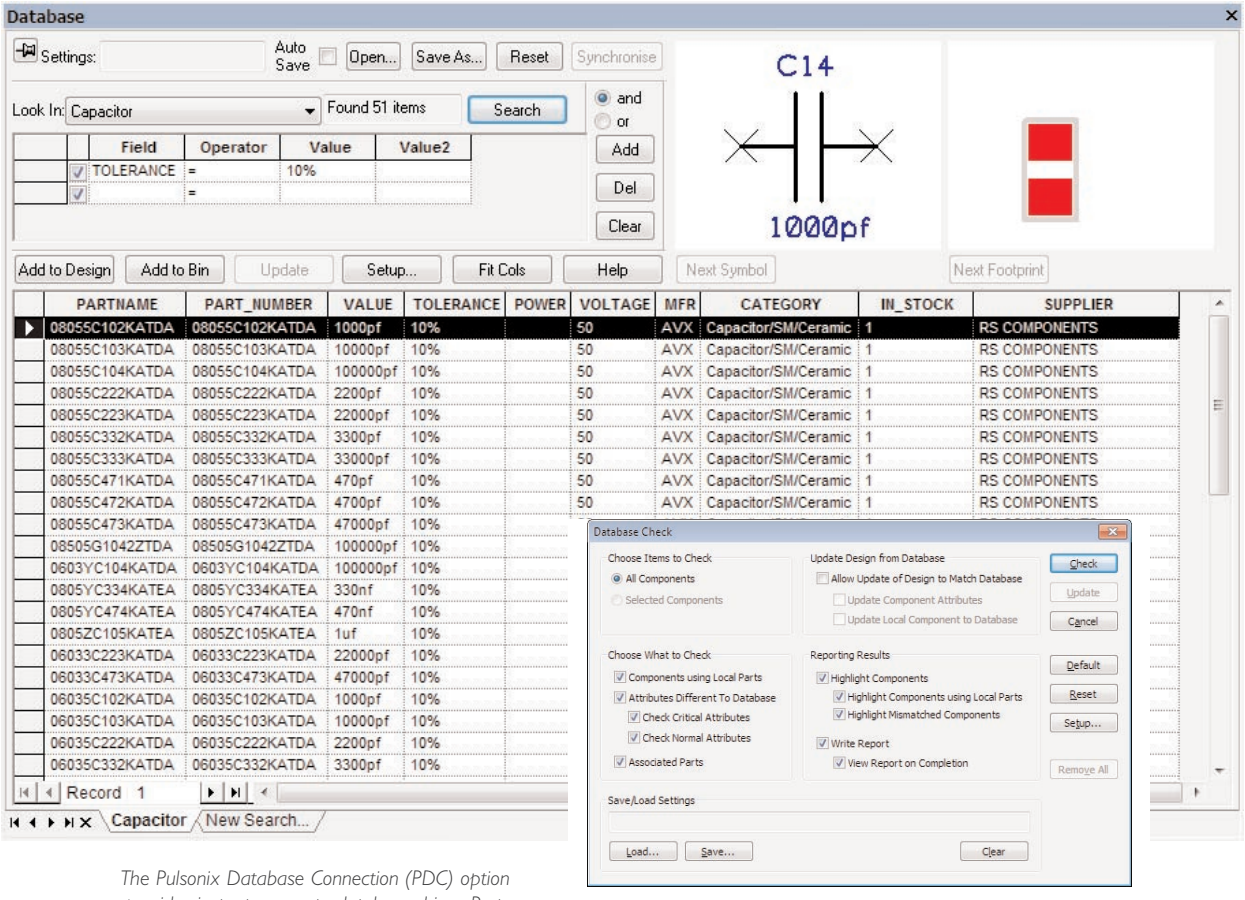

The Pulsonix Database Connection (PDC) option provides instant access to database driven Parts

Check Parts in your design against critical key fields in your database

Feature Summary

- Connects to corporate database
- Uses an industry standard ODBC
- Allows access to many databases and other storage formats such as MS Access, MS Excel, CSV, TXT, Dbase, Fox, Sage, MySQL and SQLServer
- Integrated environment within Pulsonix
- Centralised database resource
- Configuration mapping of data fields
- Migration tool available for Parts libraries
- Add Parts from SCM and PCB designs
- Powerful parametric searching
- Refine searching from 'rough' searches
- Preview windows shows both SCM Symbol and PCB Footprint
- Part analysis of design items to database
- Report 'local' Parts not in the database
- Check selected Parts or whole design
- Update design based on critical fields
- Option update design based on mismatched non-critical fields

Pulsonix

20 Miller Court, Severn Drive,
Tewkesbury, Glos, GL20 8DN
United Kingdom

Tel: +44 (0)1684 296 551
E-mail: sales@pulsonix.com
Web: pulsonix.com

Copyright © WestDev Ltd 2015
All rights reserved. Pulsonix is a registered Trademark of WestDev Ltd. All other trademarks are acknowledged to their rightful owners. E&OE.

PSX090315